Level 1

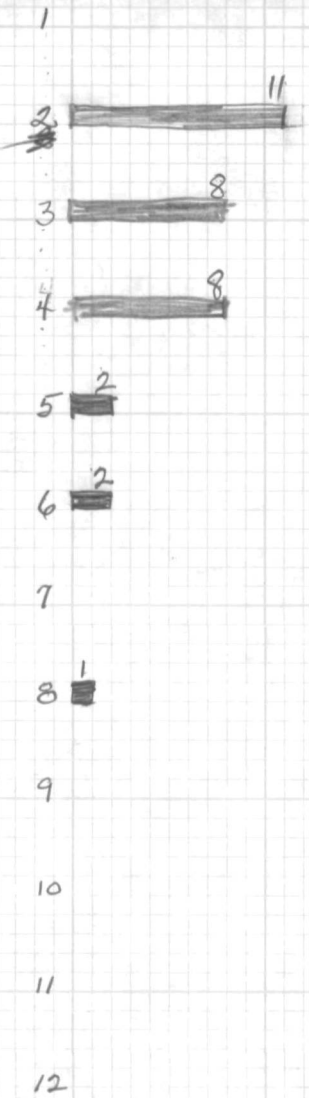

32

Level 2

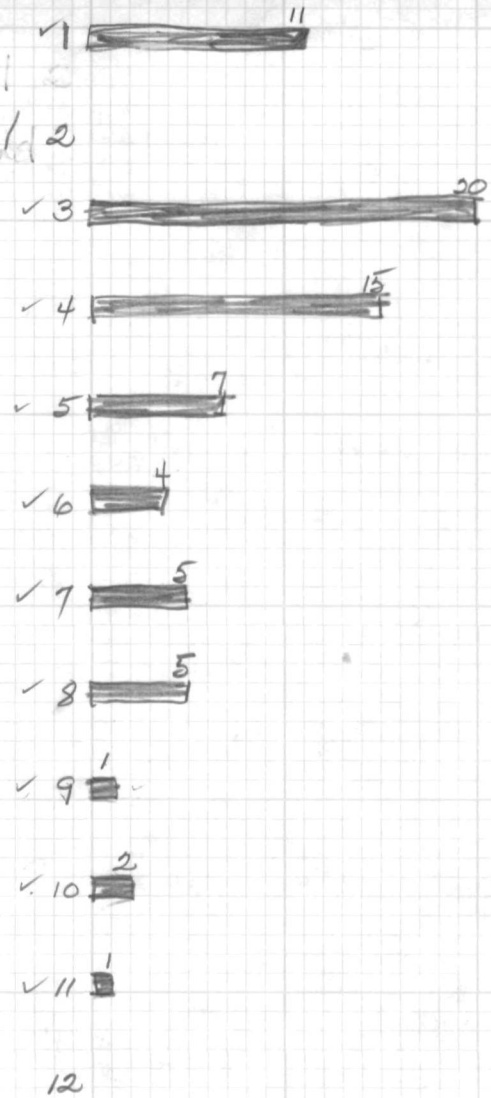

71

Well X-mends

1 8

2 20

Level 3

✓ 4 15 15

✓ 5 4

✓ 6 3

✓ 7 3

✓ 8 3

✓ 9 1

✓ 10 1

11

12

60 ✓

1 8

2 15

3 15

Level 4

✓ 5 4

✓ 6 3

✓ 7 1

✓ 8 2

✓ 9 1

10

11

12

49 ✓

1 2

2 7 7

3 4

4 4

Level 5

✓ 6 15 15

✓ 7 8

✓ 8 5

✓ 9 1

✓ 10 1 not on others

11

12

46 ✓

Well X-mends

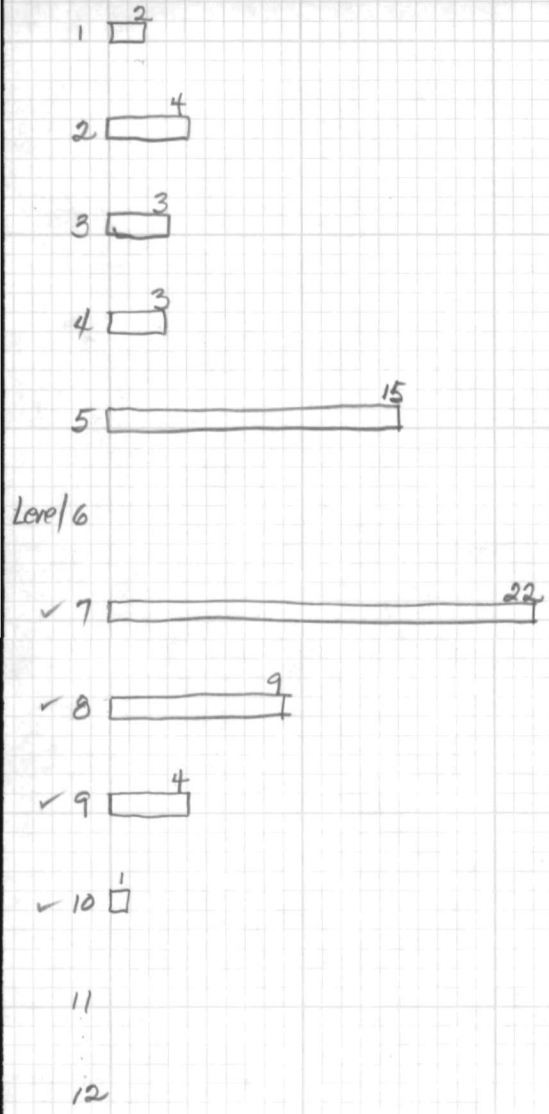

63 ✓

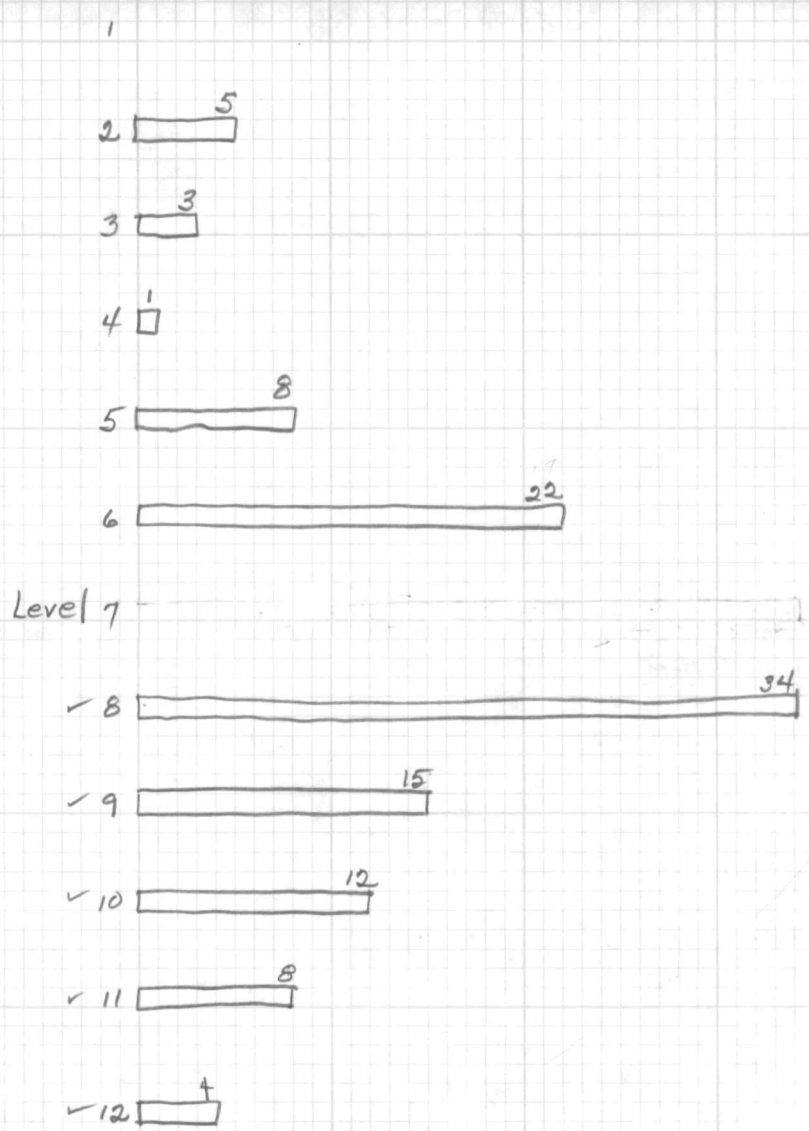

112 ✓

Well X-mends

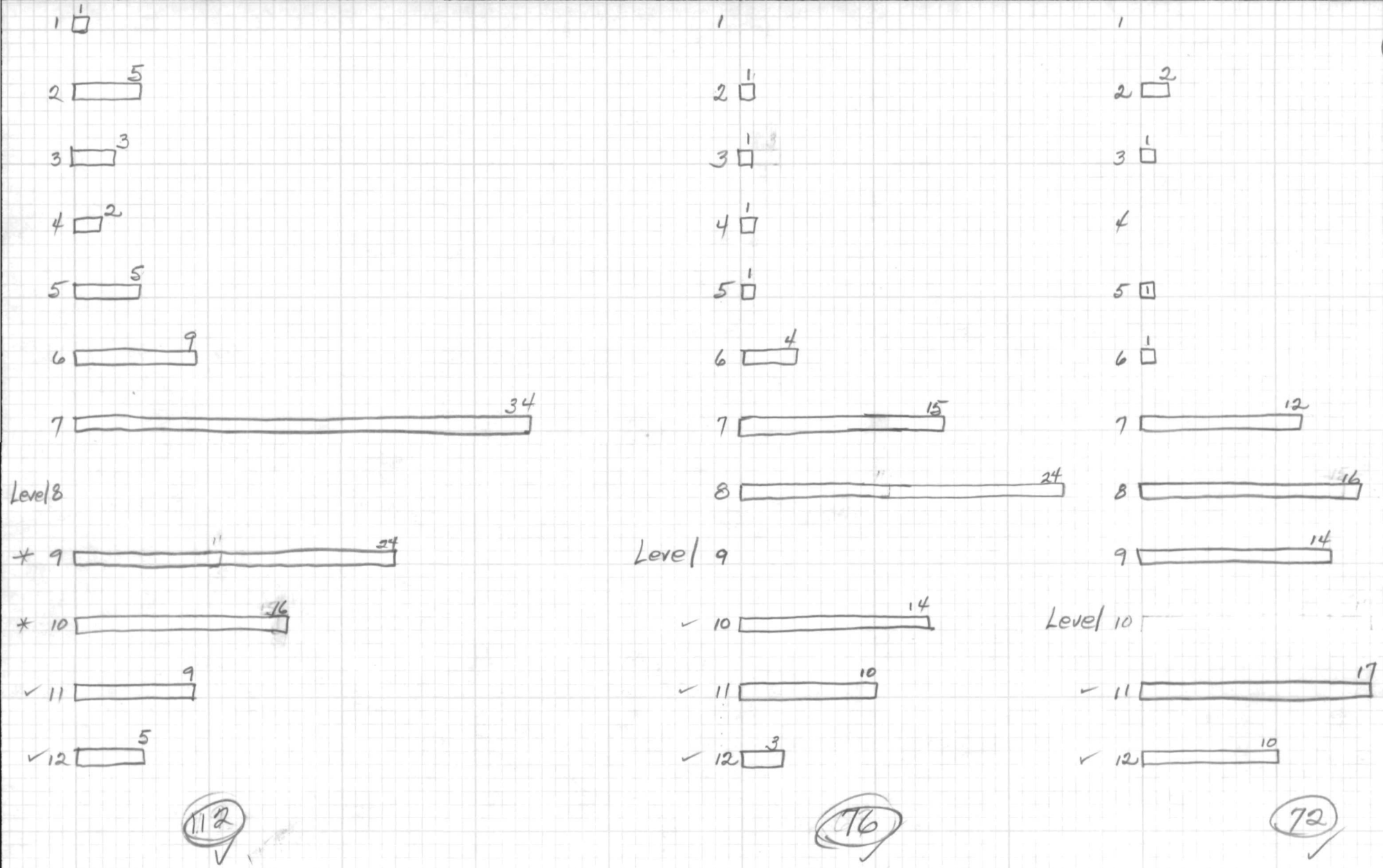
1 1
2 5
3 3
4 2
5 5
6 9
7 34
Level 8
* 9 24
* 10 16
✓ 11 9
✓ 12 5
112
1
2 1
3 1
4 1
5 1
6 4
7 15
8 24
Level 9
✓ 10 14
✓ 11 10
✓ 12 3
76
1
2 2
3 1
4
5 1
6 1
7 12
8 16
9 14
Level 10
✓ 11 17
✓ 12 10
72

Well X-mends

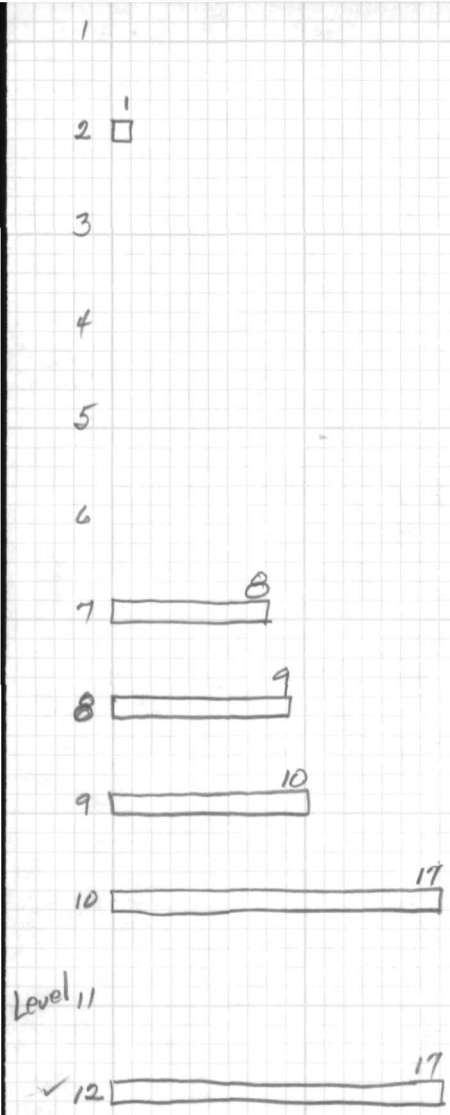

62 ✓

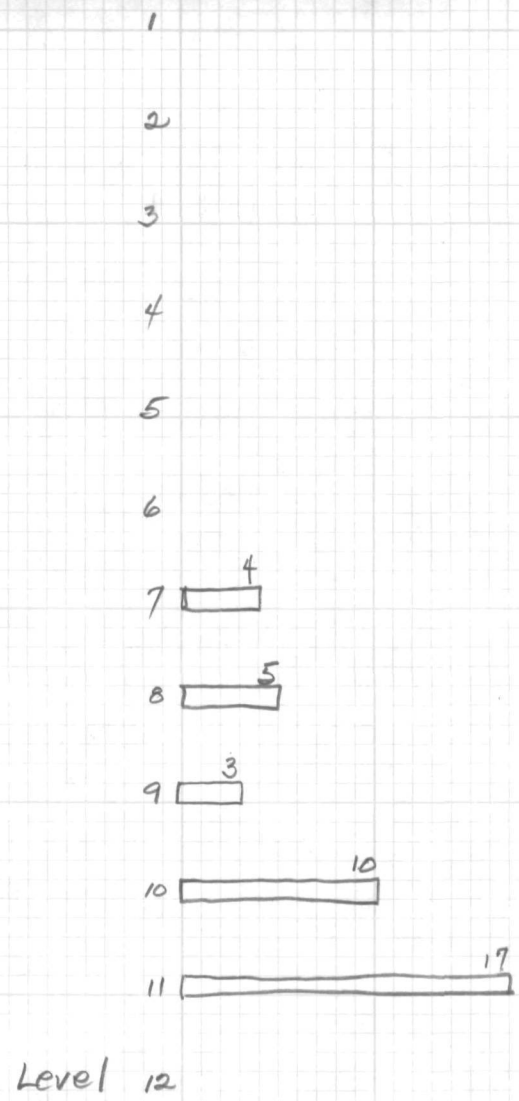

39 ✓

Well X-mends

TYPE IN

	A	B	C	D	E	F
			INCLUDING UNIDENTIFIED		NOT INCLUDING UNIDENTIFIED	
1			%		%	
2	COFFEE/TEA POT	11	1.9	11	2.1	
3	PITCHER	8	1.4	8	1.5	
4	CREAMER	3	0.5	3	0.6	
5	CUP	85	14.4	85	16.0	
6	SM. BOWL	53	9.0	53	10.0	
7	SUGAR BOWL	1	0.2	1	0.2	
8	LG. BOWL	30	5.1	30	5.6	
* 9	MILK PAN	1	0.2	1	0.2	
10	GRAVY BOAT/TUREEN	4	0.7	4	0.8	
11	CHAMBER POT	2	0.3	2	0.4	
12	SM. CONTAINER	1	0.2	1	0.2	
13	EGG CUP	8	1.4	8	1.5	
14	CERAMIC TUMBLER	2	0.3	2	0.4	
15	VASE	7	1.2	7	1.3	
16	DOG BOWL	2	0.3	2	0.4	
17	MARMALADE JAR	93	15.8	93	17.5	
18	JUG/CROCK/JAR	19	3.2	19	3.6	
19	BAKING DISH	3	0.5	3	0.6	
20	CUSTARD CUP	4	0.7	4	0.8	
21	FLOWER POT	19	3.2	19	3.6	
22	TOY	1	0.2	1	0.2	
23	TABLEWARE LID	3	0.5	3	0.6	
24	STORAGE LID	1	0.2	1	0.2	
25	FLOWER POT HOLDER	1	0.2	1	0.2	
26	UNID. POURING FORM	1	0.2			
27	" CURVED "	12	2.0			
28	" CROCKERY	1	0.2			
29	" HOLLOW FORM	23	3.9			
30	PLATE	72	12.2	72	13.5	
31	PLATTER	8	1.4	8	1.5	
32	SAUCER	90	15.3	90	17.0	
33	UNID. FLAT FORM	11	1.9			
34	UNIDENTIFIABLE FORM	10	1.7			
35		590		532		
36			100.4%		100.5%	
37		1.86440678		2.06766917		

All Sumner Wellers Ceramics

5+ Crossmends

(for 1-4 x-mends see large chart)

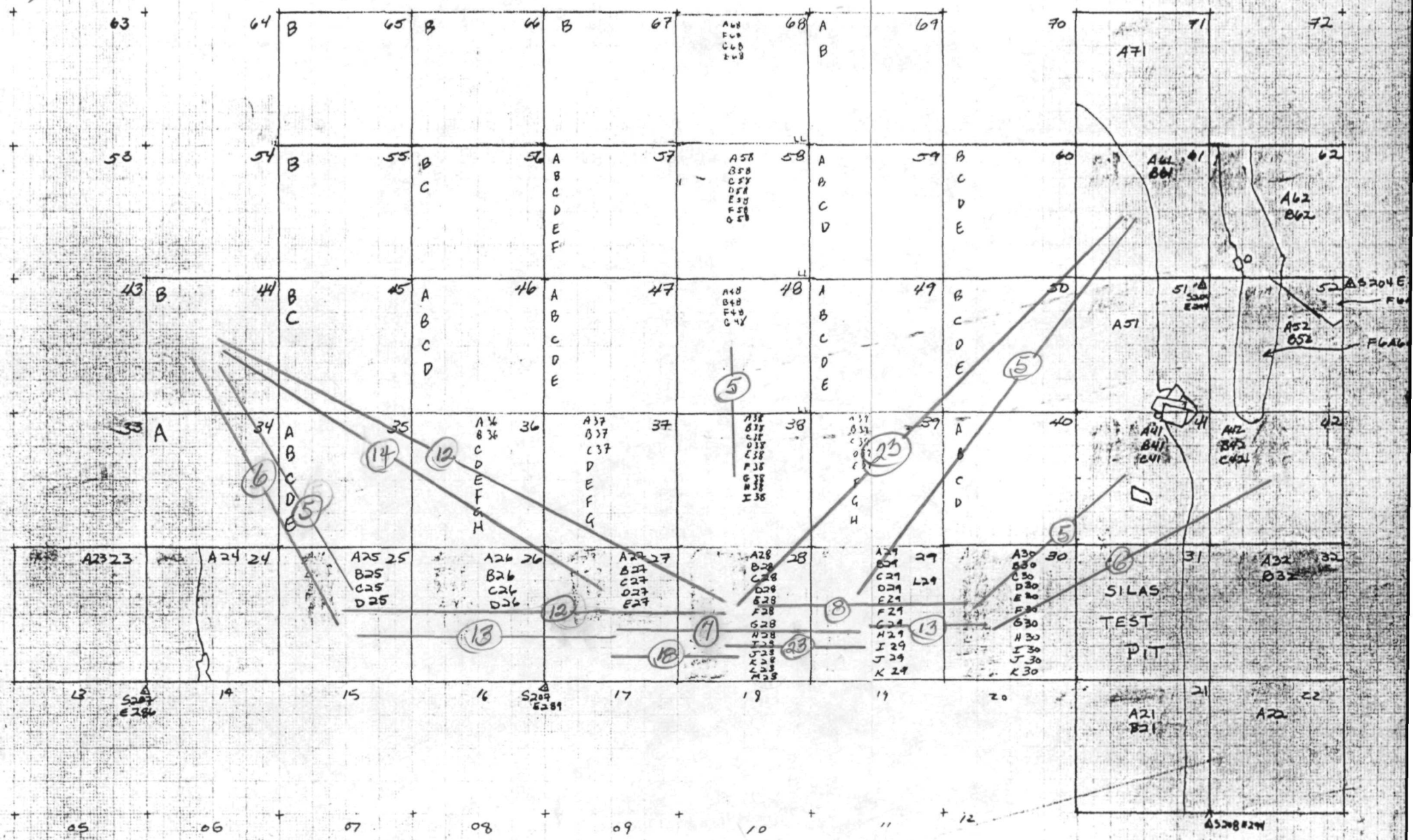

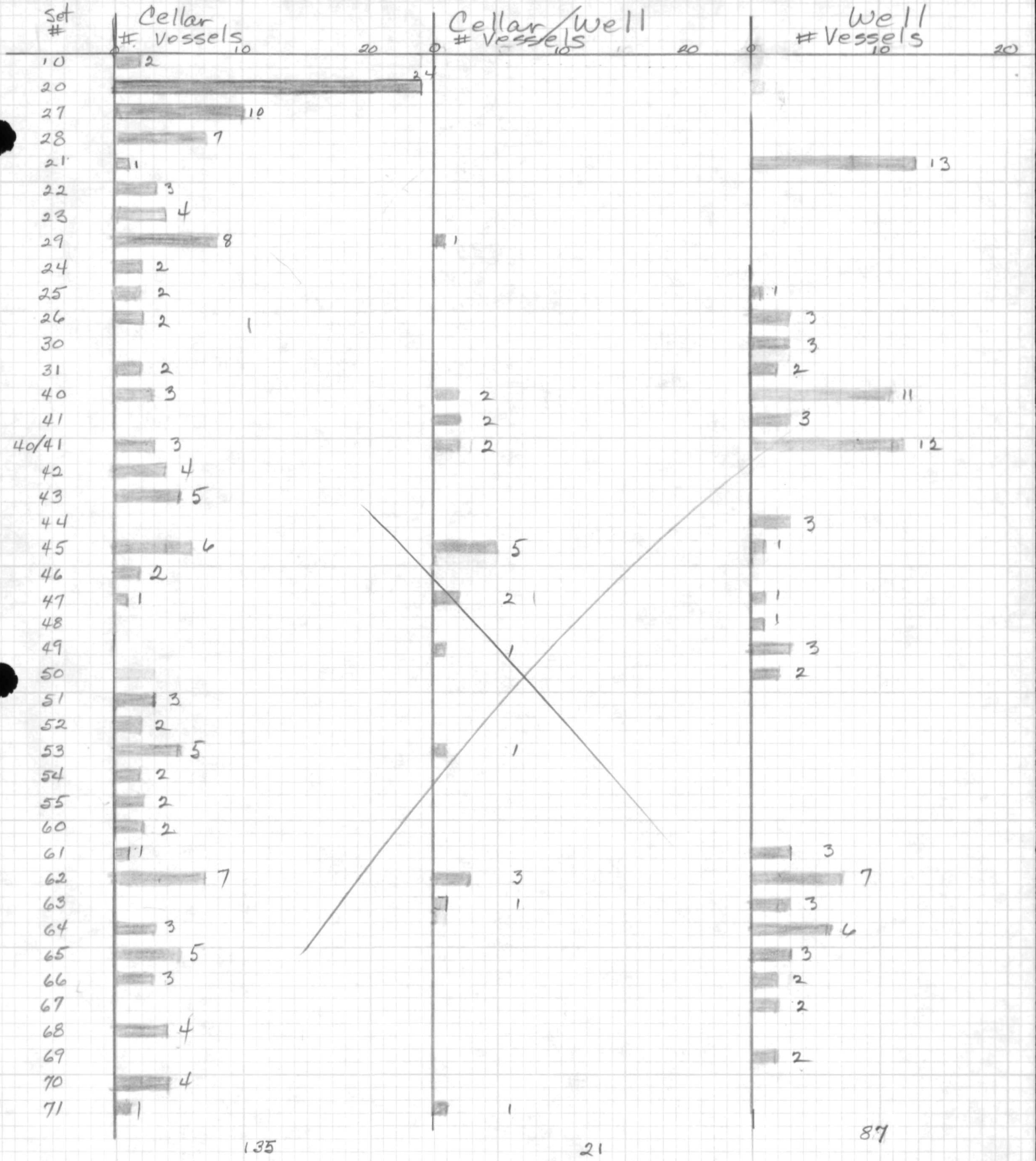
Set #
Cellar # Vessels
Cellar/Well # Vessels
Well # Vessels
0
10
20
10 2
20 24
27 10
28 7
21 1 13
22 3
23 4
29 8 1
24 2
25 2 1
26 2 1 3
30 3
31 2 2
40 3 2 11
41 2 3
40/41 3 2 12
42 4
43 5
44 3
45 6 5 1
46 2
47 1 2 1 1
48 1
49 1 3
50 2
51 3
52 2
53 5 1
54 2
55 2
60 2
61 1 3
62 7 3 7
63 1 3
64 3 6
65 5 3
66 3 2
67 2
68 4
69 2
70 4
71 1 1
135
21
87
Residual Vessels not included

11b7

Code	1-25% 1	26-50% 2	51-75% 3	76-98% 4	99-100% 5	All loose sherds 9	
coffee/teapot 10	5	2		1		3	11
pitcher 102	3	2	1	1		1	8
cream 103		2	1				3
cup 111	37	19	18	8		3	85
sm bowl 112	19	20	8	3		3	53
sugar bowl 113				1			1
lg. bowl 115	17	8	3	2			30
milk 116						1	1
gravy 117		2		2			4
chamb 118		1	1				2
sm. cont. 119			1				1
egg 120	2	3	1		1	1	8
cream/milk 122						2	2 207
vase 123	2						2
dog bowl 124		1	1				2
marmal 131	31	11	15	22	14		93
jug/c/d 132	10	1	3	2		3	19
bak 135	1			2			3
cust 136	1		2	1			4
fl pot 141	7	4	3	1	1	2	18
table lid 143	2		1				3
stora 144				1			1
fl pot base 145		1					1
un pour 196	1						1
un cup 197	10					2	12
sen crock 198	1						1
un bowl 199	8+10 18					1+4 5	23
plate 201	37	19	11	5			72
							464

4/27

Code	1	2	3	4	5	9	
flat 202	1	3	3	1			8
sanc 203	17	32	25	11	3	2	90
unflat 299	9					2	11
unform 999	1					8	9
	232	131	98	64	19	38	582

Kathy will put in computer

Marmelade X-mends

# 2020	~~B7Y~~	2030		2031
B1Y		B61	61/28	11
H28		C28	61/29	12
		E29	28/29	
~~2030~~		G28		
		H28		
		H29		

2035	2056	~~2065~~	2072
A30	G28		7
E30	I28		8
G30	Y00		

2075	2079	2080	2087
10	8	10	4
11	9	11	6
	10		7
	11		
	12		
	X646017Z02		

2089	2096	2101	2155	
K29	B1Y	10	H30	30/29
L29	Y00	11	K29	
			L29	

Marmelade Xs

2156
1
2

2187
B1Y
B44

2016
1
2

2055
J30
Y00

2062
3
4

2160
J28
K28
L28
M28
Y00

2164
2
4

2171
D28 28/29
F29
Y00

2174
E29 29/30
E30
H30
Y00

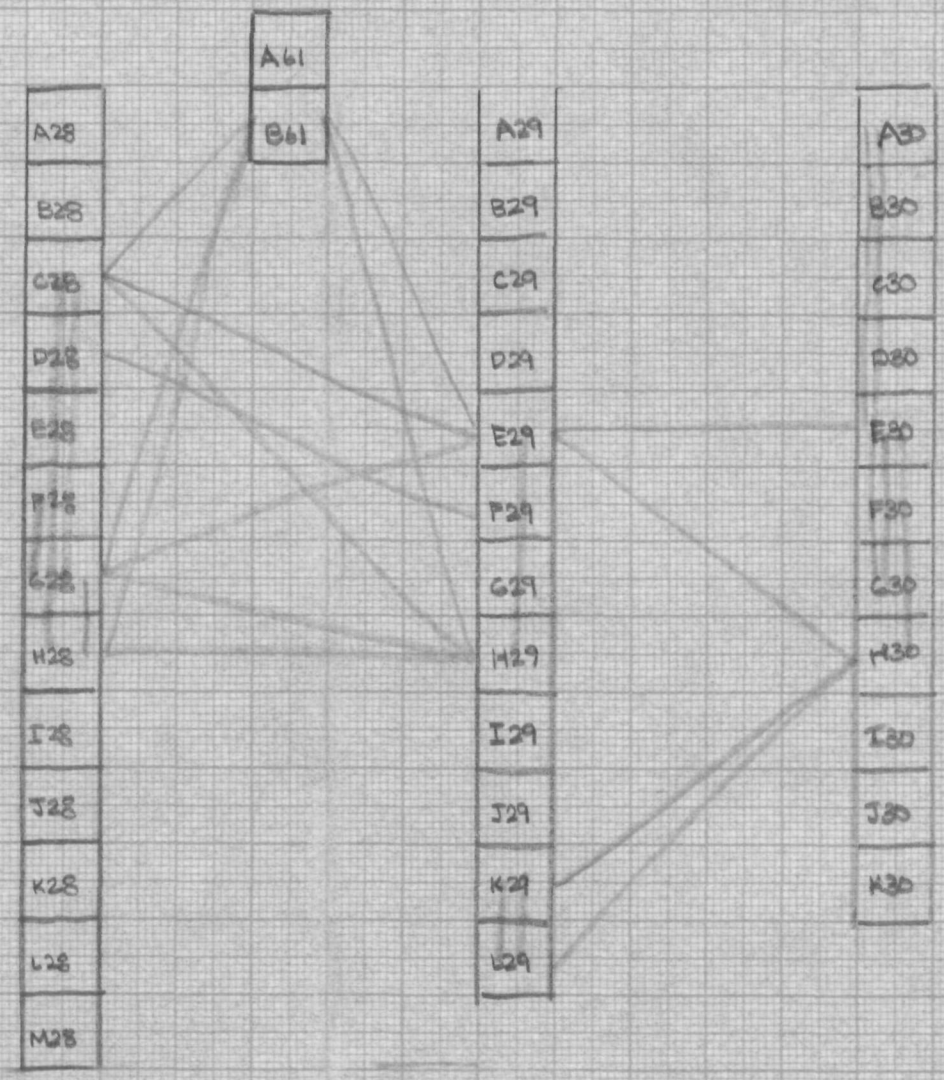

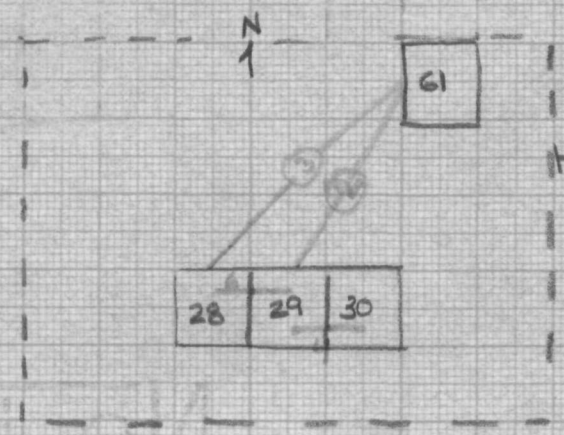

Marmalade
Hz + Vertical x-mends

(exclude anything
mending w/ 400)

Residual

(1) #2080 (MARM) has been taken out

Take out #2126 FC #2394

	CROSSMENDS	# of occurrences	Vessel #s
Well Well	K6B7000008 - K6B7000009	2247 2248 2252 2253 ~~////~~ ~~////~~ 1	2148, 2150, 2232, 2243, 2245 2000, ~~2047~~, ~~2079~~, 2131
2429, 2384 2623, 2390 2453, 2382	K6B7000008 - K6B7000010 [2270]	[2149] [2269] ~~////~~ ~~////~~ ~~////~~ 1	2223, 2232, 2245, 2331, 2382 2000, ~~2047~~, ~~2079~~, 2131
2311, 2623, 2429	K6B7000009 - K6B7000010	2331, 2345 ~~////~~ ~~////~~ 1111	2131, 2232, 2245, 2296 2000, 2025, ~~2047~~, ~~2079~~
	[2269] [2234] 2684, 2613 2623	8+9 ~~////~~ ~~////~~ 111	2384, 2428, 2429, 2447 2329, 2331, 2356, 2382
F30 F00	K6A6001F30 - K6A6001G30	1111	2013, 2425, 2500, 2661
Y00	K6A6001F30 - K6A6001H30	11	2013, 2425
	K6A6001F30 - K6A6001J29	1	2013
	F30 - J30	1	2013
	F30 - K30	1	2013
	F30 - Y00	1111	2013, 2115, 2425, 2500
G G30	K6A6001G30 - K6A6001H30	~~////~~ 1	2552 2013, 2115, 2425, 2445
Y00	G30 - J29	1	2013
	G30 - J30	11	2013, 2125
	G30 - K30	1	2013
2552	G30 - Y00	~~////~~ 1111	2353, 2425, 2446, 2500 2013, 2125, 2134, 2330
H30	K6A6001H30 - K6A6001J29	1	2013
	H30 - J30	11	2013, 2322
	H30 - K30	11	2013, 2283
	[2573] H30 - Y00	~~////~~ 1111	2397, 2425, 2552, 2564 2013, 2125, ~~2174~~, 2283
J29	K6A6001J29 - K6A6001J30	1	2013
	J29 - K30	1111	2013, 2283, 2400, 2431
	J29 - Y00	1111	2013, 2283, 2286, 2393
J30	K6A6001J30 - K6A6001K30	1	2013
	J30 - Y00	~~////~~ 11	2013, ~~2055~~, 2129
Y00 K30	K6A6001K30 - K6A6001Y00	111	2013, 2283, 2285
2411 2457	K6B7000001 - K6B7000002	~~////~~ ~~////~~ 1	2256, 2271, 2295, 2309, 2327 ~~2016~~, ~~2156~~, 2222, 2224
H28 B1Y	K6A6001 [B1Y] - K6A6001H28	1	~~2020~~, 2393

CROSSMENDS

		#	Vessel #
Y00 A24	K6A6001A24 - K6A6001D25	11	2021, 2315
	A24 - Y00	111	2021, 2039, 2315
2596	K6A6001D25 - K6A6001Y00	𝍸 𝍸 1	2219, 2299, 2315, 2377, 2507 2021, 2048, 2083, 2121
~~2394~~, 2532, 2658	2346, 2383, ~~2157~~	2328 2341 1111	2262, 2263, 2266, 2297, 2316
2525, 2547,	K6A6001B1Y - K6A6001Y00	𝍸 𝍸 𝍸 𝍸	2024, ~~2096~~, 2106, 2255, 2261
2438, 2416	2546, 2548, 2605, 2609, 2629, 2607	2331, 2356, 2408 111	2201, 2251, 2254, 2294, 2310,
2542, 2427	K6B7000006 - K6B7000007	𝍸 𝍸 𝍸 𝍸	2026, 2045, ~~2087~~, 2179
B61 H29	K6A6001B61 - C28	11	~~2030~~, 2110, 2508
	B61 - E29	11	~~2030~~, 2126, 2508
	B61 - G28	𝍸 111	2352, 2581, 2633, 2118 ~~2030~~, 2054, 2206, 2300
	B61 - H28	𝍸 1111	2118 ~~2030~~, 2054, 2206, 2522
	B61 - H29	𝍸 1	~~2030~~, 2206
C28	C28 - E29	𝍸 1	~~2030~~, 2508
	C28 - G28	𝍸	~~2030~~
	C28 - H28	𝍸	~~2030~~
	C28 - H29	𝍸	~~2030~~
E29	E29 - G28	𝍸	~~2030~~
	E29 - H28	𝍸	~~2030~~
	E29 - H29	𝍸 1	~~2030~~, 2603
G28	2603 2486 G28 - H28	𝍸 𝍸 𝍸	2393, 2482, 2499, 2576, 2597 ~~2030~~, 2054, 2048, 2206
	G28 H29	𝍸 1	~~2030~~, 2206
H29 H28	H28 - H29	𝍸 1	~~2030~~, 2206
2683 2456, 2623, 2127, 2233, 2409, 2413			2223, 2407, 2540, 2543
2612 2630	K6B7000011 - K6B7000012	𝍸 𝍸 𝍸 11	~~2031~~, 2046, ~~2079~~, 2127
A30	K6A6001A30 - K6A6001E30	𝍸 1	~~2035~~, 2500
	K A30 - G30	11	~~2035~~, 2500
G30 E30	E30 G30	11 𝍸	2500, 2552, ~~2036~~, 2125, 2425
B37	K6A6001B37 - K6A6001C38	1	2036
E30 J30	K6A6001E30 - K6A6001J30	11	2038, 2125
2419, 2407	2544, 2623, 2683	2233, 2245, 2344, 2345	~~2101~~, 2131, 2213, 2223, 2232,
2456, 2429, 2413	KB7000010 - KB7000011	𝍸 𝍸 𝍸 1111	2046, ~~2075~~, ~~2079~~, ~~2080~~
2456, 2683, 2407			2233, 2344
2623, 2413	KB7000010 - 12	𝍸 𝍸 1	2046, ~~2079~~, 2127, 2223
2390, 2459, 2428	2540, 2546	2331, 2381, 2382, 2384	2179, 2203, 2223, 2243, 2247
2438, 2461, 2429	KB7000007 - KB7000008	𝍸 𝍸 𝍸 𝍸 𝍸	~~2072~~, 2131
2542, 2609, 2613		𝍸 111	2248, 2252, 2253, 2310

CROSSMENDS

					#mends	Vessel #
2429	2384, 2613, 2619				2331 2356 2258 2382	2247, 2248, 2252, 2253
	K6B7000007	-	K6B7000009		~~////~~ ~~////~~ ~~////~~	~~2247~~, 2131, 2230, 2243
2540, 2407 $\boxed{2269}$ 2429	7	-	10		~~////~~ ~~////~~ ||	2331, 2382, 2384, 2390, ~~2247~~, 2131, 2213, 2223
B29	K6A6001	B29 - K6A6001	B44		|	2048
		B29	C27		|	2048
		B29	D25		|	2048
		B29	D28		|	2048
		B29	E27		|	2048
		B29	G28		|	2048
		B29	H28		|	2048
		B29	J28		|	2048
		B29	Y00		|	2048
B44	K6A6001	B44 - K6A6001	C27		||	2048, 2586
		B44	D25		~~////~~	$\boxed{2587}$ 2048, 2219, 2377, 2393
		B44	D28		||	2048, 2352
		B44	E27		~~////~~ ||	2451, 2523, 2586, 2048, 2205, 2317, 2393
		B44	G28		|||	2048, 2352, 2393
		B44	H28		||	2048, 2393
		B44	J28		||	2048, 2393
		B44	Y00		~~////~~ |	2377, ~~2394~~, 2451 2048, 2219, 2250, 2352
C27	K6A6001	C27 - K6A6001	D25		||||	2048, 2443, 2467, 2507
		C27 -	D28		|	2048
		C27 -	E27		||||	2048, 2443, 2467, 2586
		C27 -	G28		||	2048, 2535
		C27 -	H28		|	2048
		C27 -	J28		|	2048
		C27 -	Y00		|||	2048, 2492, 2507

		# occurrences	Vessel #s
D25	K6A6001 D25 - K6A6001 D28	I	2048
	D25 - E27	~~IIII~~ I	2467, 2048, 2114, 2299, 2393, 2443
	D25 - G28	II	2048, 2393
	D25 - H28	II	2048, 2393
	D25 - J28	II	2048, 2393
D28	K6A6001 D28 - K6A6001 E27	II	2048, 2376
	D28 - G28	III	2048, 2352, 2681
	D28 - H28	III	2048, 2522, 2681
	D28 - J28	I	2048
	D28 - Y00	IIII	2048, ~~2471~~, 2352, 2376
E27	K6A6001 E27 - K6A6001 G28	II	2048, 2393
	E27 - H28	I	2048
	E27 - J28	II	2048, 2393
	E27 - Y00	~~IIII~~	2532, 2048, 2299, 2376, 2481
~~G28~~	~~K6A6001 G28 - K6A6001 H28~~	~~I~~	~~2048~~
	2602 G28 - J28	~~IIII~~ I	2597 2048, 2393, 2481, 2519
	2599 2486 G28 - Y00	~~IIII~~ ~~IIII~~	2300, 2352, 2524, 2597, 2048, 2054, 2056, 2297
H28	K6A6001 H28 - K6A6001 J28	IIII	2602 2048, 2393, 2597
	2486 H28 - Y00	IIII	2048, 2054, 2597
Y00 J28	K6A6001 J28 - K6A6001 Y00	~~IIII~~ II	2527, 2597 2048, ~~2160~~, 2194, 2346, 2370
Y00 A42	K6A6001 A42 - K6A6001 I30	I	2053
	A42 - Y00	I	2053, 2430
	K6A6001 I30 - K6A6001 Y00	~~IIII~~ I	2421, 2053, 2132, 2142, 2283, 2402
Y00 B61	K6A6001 B61 - K6A6001 Y00	IIII	2054, 2300, 2347, 2352
~~G28~~	~~K6A6001 G28 - K6A6001 Y00~~	~~I~~	~~2054~~

CROSSMENDS	# occurences	Vessel #
K6A6001 G28 - K6A6001 I28	III 3	2602 ~~2056~~, 2393, 2482
K6A6001 I28 - K6A6001 Y00	IIII 3	~~2056~~, 2393, 2421, 2483
2624, 2488, 2405, 2656, [2594] 2411 K6B7000 003 - K6B7000 004 ✓	~~IIII~~ ~~IIII~~ IIII	2225, 2265, 2295, 2375 ~~2060~~, 2141, 2222, 2224
[2269] K6B7000 008 - K6B7000 011 ✓	~~IIII~~ ~~IIII~~ IIII	2245, 2329, 2429, 2540, 2623 ~~2079~~, 2131, 2223, 2232
8 - 12 ✓	~~IIII~~ I	2540, 2623 ~~2079~~, 2223, 2243, 2470
~~8 - X6A6017 Z02~~	~~I~~	~~2079~~
[2269] [2412] 9 - 11 ✓	~~IIII~~ ~~IIII~~	2245, 2329, 2345, 2429, 2623 ~~2079~~, 2127, 2131, 2232
9 - 12 ✓	IIII	2623 ~~2079~~, 2127, 2243
~~9 - X6A6017 Z02~~	~~I~~	~~2079~~
~~10 - X6A6017 Z02~~	~~I~~	~~2079~~
~~11 - X6A6017 Z02~~	~~I~~	~~2079~~
~~12 - X6A6017 Z02~~	~~I~~	~~2079~~
K6A6001 G30 - K6A6001 H30	III	2081, 2125 [2573]
G30 - I30	III	2081, 2125, 2425
H30 - I30	~~III~~	[2574] 2081, 2283, 2425, 2433
Well K6B7000 004 - K6B7000 006 ✓	IIII	2608, ~~2087~~, 2141, 2222, 2327
4 - 7 ✓	II	~~2087~~, 2613
~~K6A6001 K29 - K6B6001 L29~~	~~I~~	~~2089~~
K6A6001 B61 - K6A6001 D28	~~III~~ I	[2530] 2110, 2352, 2508, 2522
C28 - D28	II	2110, 2508
K6A6001 K28 - K6A6001 L28	~~IIII~~ IIII	2626 [2530] 2112, 2137, ~~2160~~
K28 - M28	IIII	2112, 2137, ~~2160~~, 2473
Unit # ~~K28 - U6A6033 02B~~ K28	~~I~~	~~2112~~ K28
L28 - M28	III	2112, 2137, ~~2160~~
~~L28 - U6A6033 02B~~ K28	~~I~~	~~2112~~
~~M28 - U6A6033 02B~~ K28	~~I~~	~~2112~~
K6A6001 B41 - K6A6001 B42	II	2115, 2322
B41 - F30	I	2115
B41 - Y00	II	2115, 2134

	# occurrences	Vessel #s
K6A6001 B42 - K6A6001 F30	1	2115
B42 - Y00	111	2115, 2132, 2430, 2440
K6A6001 M28 - K6A6001 Y00	~~111~~ 1111	2116, ~~2160~~, 2315
K6A6001 K29 - K6A6001 M28	1	2117
K6A6001 C26 - K6A6001 D25	1	2121
C26 - E28	1	2121
C26 - Y00	1	2121
D25 - E28	1	2121
E28 - Y00	1111	2121, 2300, 2324, 2352
~~C/W~~ ~~C/W~~ ~~K6A6001 Y00 - K6B7000003~~	~~1~~	~~2122~~ FC0103
K6A6001 E30 - K6A6001 H30	~~111~~ 1111	2125, ~~2174~~, 2425, 2552
E30 - Y00	1111	2125, ~~2174~~, 2500, 2552
E30 - I30	11	2125, 2425,
~~E30 - H30~~	~~111~~	~~2125~~
~~K6A6001 B61 - K6A6001 D29~~	~~1~~	~~2126~~
~~B61 - E29~~	~~1~~	~~2126~~
~~B61 - G29~~	~~1~~	~~2126~~
~~B61 - I28~~	~~1~~	~~2126~~
~~B61 - J29~~	~~1~~	~~2126~~
D29 - E29	11	~~2126~~, 2397
~~D29 - G29~~	~~1~~	~~2126~~
~~D29 - I28~~	~~1~~	~~2126~~
~~D29 - J29~~	~~1~~	~~2126~~
E29 - G29	11	~~2126~~, $\boxed{2506}$
~~E29 - I28~~	~~1~~	~~2126~~
E29 ~~E29 -~~ J29	11	~~2126~~, 2603
G29 ~~G29 -~~ I28	11	~~2126~~, 2393
~~G29 - J29~~	~~1~~	~~2126~~
I28 - J29	~~1~~ 1	~~2126~~, 2393

	# of occurrences	Vessel #
K6A6001 E29 - K6A6001 F29	1	~~2126~~, 2508
~~well K6B7000011 - K6B7000012~~	~~IIII 1~~	~~2456, 2623~~ [pg. 2] ~~2127, 2233, 2409, 2413~~
K6A6001 E29 - K6B6001 J30	1	2129
E29 - Y00	IIII	2129, ~~2174~~, 2376, 2513
K6B7000 007 - K6B7000 011	IIII III	2223, 2439, 2462, 2540 2131, 2213, 2296, 2407
K6A6001 A42 - K6A6001 B42	III	2132, 2322, 2430
K6A6001 B41 - K6A6001 G30	1	2134
K6A6001 J28 - K6A6001 K28	IIII IIII	2602, [2118] [2530] [2580] 2137, ~~2160~~, 2314, 2346, 2370
J28 - L28	II	2137, ~~2160~~
J28 - M28	II	2137, ~~2160~~, 2527
A38 - Y00	1	2138
L29 - M28	1	2140
Well K6B7000 003 - K6B7000 005	IIII	2141, 2222, 2294, 2466
3 - 6	III	2141, 2222, 2294
4 - 5	IIII	2141, 2222, 2256, 2608
2608, 2622, 2466 [2119] 2541 5 - 6	IIII IIII IIII	2179, 2408, 2416, 2418, 2438 2141, 2179, 2201, 2222, 2294
~~K6A6001 H30 - K6A6001 K29~~	~~1~~	~~2155~~
~~H30 - L29~~	~~1~~	~~2155~~
K6A6001 K28 - K6A6001 Y00	III	~~2160~~, 2346, 2370
~~L28 - Y00~~	~~1~~	~~2160~~
2405, 2309, 2327 2256, 2265, 2295 K6B7000 002 - K6B7000 004	IIII IIII IIII	2411, 2471, 2624, 2656, [2594] ~~2167~~, 2222, 2224, 2225
K6A6001 D28 - K6A6001 F29	II	~~2171~~, 2508
~~F29 - Y00~~	~~1~~	~~2171~~
~~K6A6001 E29 - K6A6001 E30~~	~~1~~	~~2174~~
~~E29 - H30~~	~~1~~	~~2174~~
K6B700000 2 - K6B700000 5	IIII II	2375, 2418, [2227] 2179, 2222, 2256, 2275
2 - 6	IIII	2179, 2222, 2327, 2418
2 - 7	IIII	2179, 2203, 2213, 2357, 2384
2 - 8	IIII	2384 2179, 2203, 2222, 2357

	# occurrences	Vessel #
~~K6B7000005 - K6B7000006~~	~~1~~	~~2179~~
K6B7000005 - K6B7000007	~~IIII~~ III	2416, 2438, 2685 2179, 2201, 2294, 2381, 2408
5 - 8	~~IIII~~	2179, 2222, 2381, 2438, 2685
6 - 8	~~IIII~~ IIII	2438, 2542, 2546, 2609 2179, 2222, 2310, 2331, 2356
K6A6001 $\boxed{\text{B1Y}}$ - K6A6001 B44	II	~~2187~~, ~~2393~~ 2393, ~~2394~~ FC
K6A6001 C46 - K6A6001 E35	1	2191
C46 - E47	1	2191
E35 - E47	1	2191
A23 - A47	1	2191
A49 - Y00	1	2198
B62 - J28	1	2199
B27 - B44	IIII	2205, 2317, 2377 $\boxed{2587}$
B27 - E27	II	2205, 2317
K6B700000 2 - 10	II	2213, 2384
2 - 11	1	2213
~~7 - 11~~	~~1~~	~~2213~~
K6A6001 A39 - K6A6001 A49	1	2221
A39 - B48	1	2221
A39 - C38	1	2221
A39 - D38	1	2221
A39 - F48	1	2221
A49 - B48	1	2221
A49 - C38	1	2221
A49 - D38	1	2221
A49 - F48	1	2221
B48 - C38	1	2221
B48 - D38	1	2221
B48 - F48	1	2221

Lots of artifacts in Level 3?
Is that why there are so many that level?

		# occurrences	Vessel #s
	K6A6001C38 - K6A6001D38	1	2221
	C38 - F48	1	2221
	D38 F48	1	2221
C/W	K6A6001 A39 - K6B7000001	1	2222
	A39 - 2	1	2222
	A39 - 3	1	2222
	A39 - 4	1	2222
	A39 - 5	1	2222
	A39 - 6	1	2222
	A39 - 8	1	2222
	1 - 3	𝍸 |||	2411, $\boxed{2274}$ $\boxed{2628}$ 2222, 2224, 2271, 2295
	1 - 4	𝍸 |||	2327, 2411 2222, 2224, 2256, 2295, 2309
	1 - 5	||	2222, 2256
	1 - 6	||	2222, 2327
	1 - 8	|	2222
2384, 2411, 2624 $\boxed{2465}$ 2405, 2458, 2656 $\boxed{2594}$	2 - 3	𝍸 𝍸 𝍸 𝍸	2276, 2293, 2295, 2298, 2357, 2375 2222, 2224, 2225, 2265, 2271
	3 - 8	|||	2222, 2357, 2384
	4 - 8	||	2222, 2613
	~~7 - 11~~	~~|~~	~~2223~~
	7 - 12	||||	2223, 2243, 2407, 2540
C/W	K6A6001 Y00 - K6B7000003	𝍸 𝍸	2340, 2341, 2359, $\boxed{2269}$ $\boxed{2281}$ 2228, 2247, 2267, 2299, 2335
C/W	K6A6001 $\boxed{B1Y}$ - K6B7000003	|||	2249, 2323, 2610
	~~K6B7000002 - K6B7000004~~	~~|||||~~ pg. 7	~~2405, 2256, 2265, 2295, 2309, 2327~~
	6 9	||||	2268, 2331, 2356 $\boxed{2612}$
	K6A6001 H30 - K6A6001J29	1	2283
	I30 - J29	1	2283
	I30 - K30	1	2283
	I29 - J29	||||	2286 2422, 2603 $\boxed{2563}$
	I29 - K29	||||	2286 2422, 2603, $\boxed{2563}$

			# occurances	Vessel #s
	K6A6001I29-	K6A6001Y00	I	2286 [2563]
	J29-	K29	IIII	2286, 2422, 2431, 2603
	K29-	Y00	I	2286
	3	7	III	2294, 2357, 2384
	B1Y	D29	I	2297
	B1Y	G28	II	2297, 2393
	D29	G28	I	2297
	D29	Y00	II	2297, 2352
CXW	D25-	3	I	2299
CXW	E27	3	I	2299
	E28-	G28	II	2300, 2352
	I28-	J28	IIII	2302, 2393, 2602, [2197]
	00 5	9	I	2311
	5	10	I	2311
	9	10	I	~~2311~~ pg. 1
	A24-	M28	I	2315
	D25	M28	I	2315
	B27-	B61	I	2317
	~~B27~~	~~E27~~	~~I~~	~~2317~~
	B44	B61	II	2317, 2352
	B61	E27	I	2317
	I28-	J30	III	2322, 2600
	A32	A42	I	2322
	A32	B41	I	2322
	A32	B42	I	2322
	A32	H30	I	2322
	A32	I28	I	2322
	A32	J30	I	2322

		# occurrences	Vessel #s	
K6A6001A42 -	K6A6001B41	1	2322	
A42	H30	1	2322	
A42	I28	1	2322	
A42	J30	1	2322	
B41	H30	1	2322	
B41	I28	1	2322	
B41	J30	1	2322	
B42	H30	1	2322	
B42	I28	1	2322	
B42	J30	1	2322	
H30	I28	1	2322	
B61	E28	11	2324, 2352	
B61	Y00	11	2324, 2532	
006 -	10	1	2331	
11 -	12	11	2342, 2344	(15 more on pg. 2)
B1Y -	J28	11	2346, 2393	
B1Y -	K28	11	2346, 2119	
B21 -	B61	1	2347	
B21 -	Y00	1	2347	
B44 -	E28	1	2352	
D28 -	E28	11	2352, 2118	
D28 -	E29	11	2376, 2508,	
E27	E29	1	2376	
B27	D25	11	2377 2587	
B27	D26	1	2377	
B27	Y00	11	2377, 2483	
B44	D26	1	2377	
D25	D26	1	2377	
~~K29~~	~~K30~~	~~1~~	~~2431~~	

K6B700000(2) -	K6B7000009	1	2384
(3) -	9	1	2384
(3) -	10	1	2384
C50 -	3	1	2385
B1Y -	D25	11	2393, 2467
B1Y -	E27	11	2393, 2467
B1Y -	G29	1	2393
B1Y -	I28	1	2393
D25 -	G29	1	2393
D25 -	I28	1	2393
B44 -	G29	1	2393
B44	I28	1	2393
E27	G29	1	2393
E27	H28	1	2393
E27	I28	1	2393
G28	G29	1	2393
G29	H28	1	2393
G29	J28	1	2393
H28	I28	~~IIII~~ 1	2602 2393, 2482, 2499, 2536
D29	E28	1	2396
D29	K30	1	2396
E28	K30	1	2396
G28	L28	1	2398
A24	A26	1	2399
A24	B25	1	2399
A24	G30	1	2399
A26	B25	1	2399
A26	G30	1	2399
B25	G30	1	2399

	A23 -	B26	I	2401
	I28 -	I30	II	2421, 2600
CXW	I28 -	12	I	2421
CXW	I30 -	12	I	2421
CXW	Y00 -	12	I	2421
	E30 -	F30	III	2425, 2500, 2660
	E30 -	Y00	I	2425
	F30 -	I30	I	2425
	K29	K30	I	2431
	B41	I30	I	2431
	C27	K29	I	2443
	D25	K29	I	2443
	E27	K29	I	2443
	A36	Y00	I	2444
	A38	A41	I	2448
	A38	A48	I	2448
	A41	A48	I	2448
	A61	Y00	I	2449
	I30	L29	I	2450
	$\boxed{B1Y}$	C27	I	2467
	B27	I28	I	2483
CXW	A36	003	I	2488
CXW	A36	004	I	2488
	A32	B25	I	2490
	H28	L28	I	2499
	I28	L28	I	2499
	A30	B30	I	2500
	A30	D30	I	2500
	A30	F30	I	2500

A30	Y00	I	2500
B30	D30	I	2500
B30	E30	I	2500
B30	F30	I	2500
B30	G30	I	2500
B30	Y00	I	2500
D30	E30	II	2500, 2678
D30	F30	I	2500
D30	G30	I	2500
D30	Y00	I	2500
B61	F29	I	2508
C28	F29	I	2508
D26	E27	II	2532, 2559
D26	Y00	III	2532, 2480, 2587
B1Y	B61	I	2532
B27	C27	I	2535
B27	G28	I	2535
A46	C46	I	2549
A46	Y00	I	2549
C46	Y00	I	2549
A46	C36	I	2550
A46	D47	I	2550
A46	Y00	I	2550
C36	D47	I	2550
C36	Y00	I	2550
D47	Y00	I	2550
A34	B46	I	2550
A34	Y00	I	2550
B46	Y00	I	2550

	H29	K29	III	2561, 2603, [2563]
	I30	J30	II	2595, 2600
	G28	K28	I	2602
CXW	G28	3	I	2602
	H28	K28	I	2602
CXW	H28	3	I ✓	2602
	I28	K28	I	2602
CXW	I28	3	I	2602
CXW	J28	3	I	2602
CXW	K28	3	I	2602
	E29	I29	II	2603
	E29	K29	I	2603
	H29	I29	I	2603
	H29	J29	IIII	2603, 2604, [2530] [2575]
	(4)	9✓	I	2613
2nd one (see pg. 2)	(7)	8✓	IIIII	2627, 2685, [2269] [2420]
	E30	G29	I	2660
	F30	G29	I	2660
	A24	A25	I	2663
	L29	Y00	I	2673
	G28	H28	I	2681
	E27	M28	I	[2118]
	A49	D28	I	[2118]
	A49	E28	I	[2118]
	D25	D26	I	[2119]
	~~C28~~	~~Y00~~	~~I~~	~~[2159]~~ Marmelade
	~~A41~~	~~B41~~	~~I~~	~~[2176]~~ "
	D28	F37	I	[2208]
	F36	M28	I	[2220]

2nd for this	B1Y – Y00	11	2486 2495 2530
	C26 D26	1	2530
	Y00 8	1	2616

Take out of X-mends

#
2550
2549
2191

done
11/26

Not Sumner Welles

C46/E35 OUT

C46/E47 OUT

A46/C46 ~~OUT~~

A46/C36 OUT

A46/D47 OUT

C36/D47 OUT

38/39 ✓ Put in ---- lines
28/26 ✓ Sumner Welles
49/48

done
2 in mind
11/26

Aggie's

B38/B39 → 2 in mind

A28/B26 → none in mine for 28/26

A49/B48 → 2 others

31 column				10 cellar		5 unprovier cellar		30 well			
Vess	# of shards		3	Vess	# of shards						
4	1	102	2	2	1	33	1	1	3	83R	1
5	4	104R	2	3	2	40	1	8	1	93	1
6	1	105	3	7	3	86	1	9	1	95	2
10	1	106	4	11	1	87	1	15	1	96R	1
12	1	103	4	18	1	88	1	30	1	97R	1
13	15			22	1			31	1	107	1
14	5			26	1			32R	2	113	1
16	1			27	1			37	1		
17	12			28	1			38	2		
19R	1			36	1			39	3		
20R	1			+7	1	+7	2	44	2		
23	3	-108	1	-108	1			45	1		
25	14	-109	1	-109	1			47	2		
29	1							49	1		
34	1							50	1		
35	2							52	1		
41	2							53	1		
— 42	7			+42	5	+42	1	54	4		
24	1			24	1			55	1		
43	1							56	2		
46	4	total 156			19 total		8 total	57	3		
48	2							58	2		
59	2							total 77			
60R	3										
61R	1										
62R	2							+62R	3		
67	3							63R	9		
70	1							64R	4		
73	3							66R	3		
78	1							68R	1		
84R	2							69R	1		
85	1							71R	1		
89	1							72	1		
90	1							74R	1		
91R	2							75R	1		
92	3							76	1		
94	2							77	2		
98	1							79	1		
99	1							80	1		
100R	34							81R	1		
101R	6							82R	1		

	cellar column		well
total	154		
✓4	1	–	1 3
✓5	4	–	8 4
✓6	1	–	9 1
✓10	1	–	15 1
✓12	1	–	
✓13	15	–	
✓14	5	–	
✓16	1	–	98 – 1 –
✓17	12	–	
19	1	–	
✓23	3	–	60 – ~~3~~ 5 – 3
✓24	2	✓	59 – 2 –
✓25	14	–	92 – 3 –
✓29	1	–	104R – 2 –
✓34	1	–	102 – 2 –
35	2	–	
✓41	2	–	20R – 1
✓42	7	✓	84R – 2 –
✓43	1	–	67R – 3 –
46	4	–	62R – 2 –
48	2	–	61 – 1 –
70	1	–	91R – 2 –
✓73	3	–	
78	1	–	
✓85	1	–	
✓89	1	–	
✓90	1	–	
✓94	2	–	
✓99	1	–	✓105 – 3 – ✓106 – 4 – 100R – 34 – 101R – 6

Vince schematic of cellar column

A30	Y00	1		2500	
upper B30 S	upper S D30	1	1	2500	
upper B30 S	upper S E30	1	1	2500	
upper B30 S	middle S F30	1	2	2500	
upper B30 S	middle S G30	1	2	2500	
B30	Y00	1		2500	
upper D30 S	upper S E30	11	1	2500, 2678	
upper D30 S	middle S F30	1	2	2500	
upper D30 S	middle S G30	1	2	2500	
D30	Y00	1		2500	
UPPER B61 S	upper S F29	1	2	2508	
upper C28 S	upper S F29	1	2	2508	
middle D26 S	middle S E27	11	4	2532, 2559	
D26	Y00	111		2532, $\boxed{2480}$ $\boxed{2587}$	
$\boxed{\text{B1Y}}$	B61	1		2532	
upper B27 S	upper S C27	1	1	2535	
upper B27 S	middle S G28	1	2	2535	F?
Trans A46 T	Trans T C46	1	?	2549	ABCDEappm
A46 S	Y00	1		2549	GHI middle
C46 T	Y00	1		2549	JKLM lowe
Trans A46 T	? T C36	1		2550	
Trans A46 T	O D47	1		2550	
A46	Y00	1		2550	
C36 T	O D47	1		2550	
C36	Y00	1		2550	
D47	Y00	1		2550	
upper A34 S	T under B46	1	7	2550	
A34	Y00	1		2550	
B46	Y00	1		2550	

Vessel #5

	# occurrences	
K6A6001 B42 (upper) - K6A6001 F30 (MIDDLE)	1	2115
B42 (upper) - Y00	III	2115, 2132, 2430, 2440
K6A6001 M28 - K6A6001 Y00	IIII	2116, ~~2160~~, 2315
K6A6001 K29 (lower) - K6A6001 M28 (lower)	1	2117
K6A6001 C26 (upper) - K6A6001 D25 (middle)	1	2121
C26 (upper) - E28 (upper)	1	2121
C26 - Y00	1	2121
D25 (middle) - E28 (upper)	1	2121
E28 - Y00	IIII	2121, 2300, 2324, 2352
~~K6A6001 Y00 - K6B9000003~~	~~1~~	~~2122~~ FC0103
K6A6001 E30 (UPPER) - K6A6001 H30 (MIDDLE)	IIII	2125, ~~2174~~ ?, 2425, 2552
E30 - Y00	III	2125, ~~2174~~, 2500, 2552
E30 (upper) - I30 (middle)	II	2125, 2425,
~~E30 - H30~~	~~III~~	~~2125~~
~~K6A6001 B61 - K6A6001 D29~~	~~1~~	~~2126~~
~~B61 - E29~~	~~1~~	~~2126~~
~~B61 - G29~~	~~1~~	~~2126~~
~~B61 - I28~~	~~1~~	~~2126~~
~~B61 - J29~~	~~1~~	~~2126~~
D29 (UPPER) - E29 (UPPER)	1	~~2126~~, 2397
~~D29 - G29~~	~~1~~	~~2126~~
~~D29 - I28~~	~~1~~	~~2126~~
~~D29 - J29~~	~~1~~	~~2126~~
E29 (UPPER) - G29 (MIDDLE)	1	~~2126~~, 2506
~~E29 - I28~~	~~1~~	~~2126~~
E29 (UPPER) - J29 (LOWER)	1	~~2126~~, 2603
G29 - I28	1	~~2126~~, ~~2393~~
~~G29 - J29~~	~~1~~	~~2126~~
I28 (middle) - J29 (lower)	1	~~2126~~, 2393

		# occurrences	Vessel #s
	upper K6A6001C38 - LOWER K6A6001D38	1	2221
	upper C38 - F48	1	2221
	LOWER D38 - F48	1	2221
C/W	K6A6001 A39 - K6B7000001	1	2222
	A39 - 2	1	2222
	A39 - 3	1	2222
	A39 - 4	1	2222
	A39 - 5	1	2222
	A39 - 6	1	2222
	A39 - 8	1	2222
	1 - 3	~~IIII~~ III	2411, [2274] [2628] 2222, 2224, 2271, 2295
	1 - 4	~~IIII~~ III	2327, 2411 2222, 2224, 2256, 2295, 2309
	1 - 5	II	2222, 2256
	1 - 6	II	2222, 2327
	1 - 8	I	2222
2384, 2411, 2624 [2465] 2405, 2458, 2656 [2594]	2 - 3	~~IIII~~ ~~IIII~~ ~~IIII~~ ~~IIII~~	2276, 2293, 2295, 2298, 2357, 2375 2222, 2224, 2225, 2265, 2271
	3 - 8	III	2222, 2357, 2384
	4 - 8	II	2222, 2613
	7 - 11	I	~~2223~~
	7 - 12	IIII	2223, 2243, 2407, 2540
C/W	K6A6001 Y00 - K6B7000003	~~IIII~~ ~~IIII~~	2340, 2341, 2359, [2269] [2281] 2228, 2247, 2267, 2299, 2335
C/W	K6A6001 [B1Y] - K6B7000003	III	2249, 2323, 2610
	~~K6B7000002 - K6B7000004~~	~~IIII~~	~~2405, 2266, 2265, 2295, 2309, 2327~~
	6	9	IIII 2268, 2331, 2356 [2612]
	middle K6A6001 H30 - lower K6A6001 J29	1	2283
	middle I30 - lower J29	1	2283
	middle I30 - lower K30	1	2283
	middle I29 - lower J29	IIII	2286 2422, 2603 [2563]
	middle I29 - lower K29	IIII	2286 2422, 2603, [2563]

Pg. 7

		# of occurrences	Vessel #
	K6A6001 E29 (upper) – K6A6001 F29 (upper)	1	~~2126~~, 2508 ~~2456, 2623~~ [pg. 2]
well	~~K6B7000011 – K6B7000012~~	~~IIII 1~~	~~2127, 2233, 2409, 2413~~
	K6A6001 E29 (upper) – K6B6001 J30 (lower)	1	2129
	E29 – Y00	IIII	2129, ~~2174~~, 2376, 2513 2223, 2429, 2462, 2540
	K6B7000 007 – K6B7000 011	IIII III	2131, 2213, 2296, 2407
	K6A6001 A42 (upper) – K6A6001 B42 (upper)	III	2132, 2322, 2430
	K6A6001 B41 (upper) – K6A6001 G30 (middle)	1	2134
	K6A6001 J28 (lower) – K6A6001 K28 (lower)	IIII III	2602, [2118] [2530] [2580] 2137, ~~2160~~, 2314, 2346, 2370
	J28 (lower) – L28 (lower)	I	2137, ~~2160~~
	J28 (lower) – M28 (lower)	II	2137, ~~2160~~, 2527
	A38 – Y00	1	2138
	L29 (lower) – M28 (lower)	1	2140
Well	K6B7000 003 – K6B7000 005	IIII	2141, 2222, 2294, 2466
	3 – 6	III	2141, 2222, 2294
	4 – 5	IIII	2141, 2222, 2256, 2608 2179, 2408, 2416, 2418, 2438
2608, 2622, 2466 2541 [2119]	5 – 6	IIII IIII IIII	2141, 2179, 2201, 2222, 2294
	~~K6A6001 H30 – K6A6001 K29~~	~~I~~	~~2155~~
	~~H30 – L29~~	~~I~~	~~2155~~
	K6A6001 K28 – K6A6001 Y00	III	~~2160~~, 2346, 2370
	~~L28 – Y00~~	~~I~~	~~2160~~
2405, 2309, 2327 2256, 2265, 2295	K6B7000 002 – K6B7000 004	IIII IIII II	2411, 2471, 2624, 2656, [2594] ~~2164~~, 2222, 2224, 2225
	K6A6001 D28 (upper) – K6A6001 F29 (upper)	I	~~2171~~, 2508
	~~F29 – Y00~~	~~I~~	~~2171~~
	~~K6A6001 E29 – K6A6001 E30~~	~~I~~	~~2174~~
	~~E29 – H30~~	~~I~~	~~2174~~
	K6B700000 2 – K6B700000 5	IIII II	2375, 2418, [2227] 2179, 2222, 2256, 2275
	2 – 6	IIII	2179, 2222, 2327, 2418
	2 – 7	IIII	2179, 2203, 2213, 2357, 2384
	2 – 8	IIII	2384 2179, 2203, 2222, 2357

	CROSSMENDS	# occurrences	Vessel #
	K6A6001 G28 (middle) - K6A6001 I28 (middle)	111 3	2602 ~~2056~~, 2393, 2482
	~~K6A6001 I28 - K6A6001 Y00~~	111 3	~~2056~~, 2393, 2421, 2483
2624, 2488, 2405, 2656, $\boxed{2594}$, 2411	K6B7000 003 - K6B7000 004	7	2225, 2265, 2295, 2375 ~~2060~~, 2141, 2222, 2224
$\boxed{2269}$	K6B7000 008 - K6B7000 011	7	2245, 2329, 2429, 2540, 262 ~~2079~~, 2131, 2223, 2232
	8 - 12	7	2540, 2623 ~~2079~~, 2223, 2243, 2470
	~~8 - X6A6017 Z02~~		~~2079~~
$\boxed{2269}$ $\boxed{2412}$	9 - 11	7	2245, 2329, 2345, 2429, 2623 ~~2079~~, 2127, 2131, 2232
	9 - 12	111	2623 ~~2079~~, 2127, 2243
	~~9 - X6A6017 Z02~~		~~2079~~
	~~10 - X6A6017 Z02~~		~~2079~~
	~~11 - X6A6017 Z02~~		~~2079~~
	~~12 - X6A6017 Z02~~		~~2079~~
	K6A6001 G30 (middle) - K6A6001 H30 (middle)	111	2081, 2125 $\boxed{2573}$
	G30 (middle) - I30 (middle)	111	2081, 2125, 2425
	H30 (middle) - I30 (middle)	7	$\boxed{2574}$ 2081, 2283, 2425, 2433
Well	K6B7000 004 - K6B7000 006	111	2608, ~~2087~~, 2141, 2222, 2327
	4 - 7	1	~~2087~~, 2613
	~~K6A6001 K29 - K6B6001 L29~~		~~2089~~
	K6A6001 B61 (upper) - K6A6001 D28 (upper)	7 1	$\boxed{2530}$ 2110, 2352, 2508, 2522
	C28 (upper) - D28 (upper)	11	2110, 2508
	K6A6001 K28 (lower) - K6A6001 L28 (lower)	7 1111	2626 $\boxed{2530}$ 2112, 2137, ~~2160~~
	K28 (lower) - M28 (lower)	111	2112, 2137, ~~2160~~, 2473
Unit # *	~~K28 - U6A6033 02B~~ K28	1	~~2112~~ K28
	L28 (lower) - M28 (lower)	111	2112, 2137, ~~2160~~
*	~~L28 - U6A603302B~~ K28	1	~~2112~~
*	~~M28 - U6A603302B~~ K28	1	~~2112~~
	K6A6001 B41 (upper) - K6A6001 B42 (upper)	11	2115, 2322
	B41 (upper) - F30 (middle)	1	2115
	B41 - Y00	11	2115, 2134

		# occurrences	Vessel #s
D25	K6A6001 middle D25 - K6A6001 upper D28	I	2048
	middle D25 - middle E27	IIII I	2467, 2048, 2114, 2299, 2393, 2443
	middle D25 - middle G28	II	2048, 2393
	middle D25 - middle H28	II	2048, 2393
	middle D25 - lower J28	II	2048, 2393
D28	K6A6001 upper D28 - K6A6001 middle E27	II	2048, 2376
	upper D28 - middle G28	III	2048, 2352, 2681
	upper D28 - middle H28	III	2048, 2522, 2681
	upper D28 - lower J28	I	2048
	D28 - Y00	IIII	2048, ~~2171~~, 2352, 2376
E27	K6A6001 middle E27 - K6A6001 middle G28	II	2048, 2393
	middle E27 - middle H28	I	2048
	middle E27 - lower J28	II	2048, 2393
	E27 - Y00	IIIII	2048, 2299, 2376, 2481, 2532
~~G28~~	~~K6A6001 G28 - K6A6001 H28~~	~~I~~	~~2048~~
	2602 middle G28 - lower J28	IIIII II	2048, 2393, 2481, 2519, 2597
	2599 2486 G28 - Y00	IIIII IIIII	2300, 2352, 2524, 2597, 2048, 2054, 2056, 2297
H28	K6A6001 middle H28 - K6A6001 lower J28	IIII	2602 2048, 2393, 2597
	2486 H28 - Y00	IIII	2048, 2054, 2597
Y00 J28	K6A6001 J28 - K6A6001 Y00	IIIII III	2527, 2597 2048, ~~2160~~, 2194, 2346, 2370
Y00 A42	K6A6001 upper A42 - K6A6001 middle I30	I	2053
	A42 - Y00	I	2053, 2430
	K6A6001 I30 - K6A6001 Y00	IIIII I	2421, 2053, 2132, 2142, 2283, 2402
Y00 B61	K6A6001 B61 - K6A6001 Y00	IIII	2054, 2300, 2347, 2352
~~G28~~	~~K6A6001 G28 - K6A6001 Y00~~	~~I~~	~~2054~~

CROSSMENDS

				#mends	Vessel # # ✓
2429	2384, 2613, 2619	K6B7000007	- K6B7000009	2331 2356 2258 2382 ~~||||~~ ~~||||~~ ~~||||~~	2247, 2248, 2252, 2253 ~~[illegible]~~, 2131, 2230, 2243
2540, 2407 $\boxed{2269}$ 2429		7	- 10	~~||||~~ ~~||||~~ ||	2331, 2382, 2384, 2390, ~~[illegible]~~, 2131, 2213, 2223
	K6A6001 upper	B29	- K6A6001 MIDDLE B44	|	2048
	upper	B29	upper C27	|	2048
	"	B29	middle D25	|	2048
	"	B29	upper D28	|	2048
	"	B29	middle E27	|	2048
	"	B29	middle G28	|	2048
	"	B29	middle H28	|	2048
		B29	LOWER J28	|	2048
		B29	Y00	|	2048
B44	K6A6001 middle	B44	- K6A6001 upper C27	||	2048, 2586 $\boxed{2587}$
	middle	B44	middle D25	~~||||~~	2048, 2219, 2377, 2393
	"	B44	upper D28	||	2048, 2352
	"	B44	middle E27	~~||||~~ ||	2451, 2523, 2586, 2048, 2205, 2317, 239[illegible]
	"	B44	middle G28	|||	2048, 2352, 2393
	"	B44	middle H28	||	2048, 2393
	"	B44	lower J28	||	2048, 2393
		B44	Y00	~~||||~~ |	2377, ~~2394~~, 2451 2048, 2219, 2250, 2352
C27	K6A6001 upper	C27	- K6A6001 middle D25	||||	2048, 2443, 2467, 2507
	upper	C27	- upper D28	|	2048
		C27	- middle E27	||||	2048, 2443, 2467, 2586
		C27	- middle G28	||	2048, 2535
		C27	- middle H28	|	2048
		C27	- LOWER J28	|	2048
		C27	- Y00	|||	2048, 2492, 2507

CROSSMENDS

		#	Vessel #
	K6A6001A24 upper – K6A6001D25 middle	11	2021, 2315
	A24 – Y00	111	2021, 2039, 2315
2596	K6A6001D25 – K6A6001Y00	1111 1111 1	2219, 2299, 2315, 2377, 2507 2021, 2048, 2083, 2121
~~2314~~, 2532, 2658	2346, 2383, ~~2157~~	2328 2341 1111	2262, 2263, 2266, 2297, 2316
2525, 2547,	K6A6001B1Y – K6A6001Y00	1111 1111 1111	2024, ~~2046~~, 2106, 2255, 2261
2438, 2416	2546, 2548, 2605, 2609, 2629, 2607	2331, 2356, 2408 11	2201, 2251, 2254, 2294, 2310,
2542, 2427	K6B7000006 – K6B7000007	1111 1111 1111 1111	2026, 2045, ~~2067~~, 2179
	K6A6001B61 upper – C28	11	~~2030~~, 2110, 2508
	B61 – E29	11	~~2030~~, 2126, 2508
	B61 – G28	1111 111	2352, 2581, 2633, 2118 ~~2030~~, 2054, 2206, 2300
	B61 – H28	1111	2118 ~~2030~~, 2054, 2206, 2522
	B61 – H29	1	~~2030~~, 2206
	C28 – E29	1	~~2030~~, 2508
	C28 – G28		~~2030~~
	C28 – H28		~~2030~~
	C28 – H29		~~2030~~
	E29 – G28		~~2030~~
	E29 – H28		~~2030~~
	E29 – H29	1	~~2030~~, 2603
2603 2486	G28 – H28	1111 1111	2393, 2482, 2499, 2576, 2597 ~~2030~~, 2054, 2048, 2206
	G28 – H29	1	~~2030~~, 2206
	H28 – H29	1	~~2030~~, 2206
2683 2456, 2623, 2127, 2233, 2409, 2413			2223, 2407, 2540, 2543
2612 2630	K6B7000011 – K6B7000012	1111 1111 1111	~~2031~~, 2046, ~~2049~~, 2127
	K6A6001A30 upper – K6A6001E30 upper	1	~~2035~~, 2500
	K A30 – G30	1	~~2035~~, 2500
	E30 – G30	11 1111	2500, 2552, ~~2036~~, 2125, 2425
	K6A6001B37 upper – K6A6001C38 upper	1	2036
	K6A6001E30 upper – K6A6001J30 lower	11	2038, 2125
2419, 2407	2544, 2623, 2683	2233, 2245, 2344, 2345	~~2101~~, 2131, 2213, 2223, 2232,
2456, 2429, 2413	KB7000010 – KB7000011	1111 1111 1111 11	2046, ~~2075~~, ~~2079~~, ~~2080~~
2456, 2683, 2407			2233, 2344
2623, 2413	KB7000010 – 12	1111 1111	2046, ~~2079~~, 2127, 2223
2390, 2459, 2428	2540, 2546	2331, 2381, 2382, 2384	2179, 2203, 2223, 2243, 2247
2438, 2461, 2429	KB7000007 – KB7000008	1111 1111 1111 1111 1111	~~2072~~, 2131
2542, 2609, 2613		1111	2248, 2252, 2253, 2310

MARMALADE?

2

Residual

(1)

#2080 (MARM) has been taken out

Take out # ~~2126~~ FC # 2B94

	CROSSMENDS	# of occurrences	Vessel #s
	K6B7000008 - K6B7000009	2247 2248 2252 2253 ~~////~~ ~~////~~ 1	2148, 2150, 2232, 2243, 2245 2000, ~~[illegible]~~, ~~[illegible]~~, 2131
2429, 2384 2623, 2390 2453, 2382	K6B7000008 - K6B7000010 [2270]	[2149] [2269] ~~////~~ ~~////~~ ~~////~~ 1	2223, 2232, 2245, 2331, 2382 2000, ~~[illegible]~~, ~~[illegible]~~, 2131
2311, 2623, 2429	K6B7000009 - K6B7000010	2331, 2345 ~~////~~ ~~////~~ ~~////~~ 1111	2131, 2232, 2245, 2296 2000, 2025, ~~2047~~, ~~[illegible]~~
	[2269] [2234] 2684, 2613 2623 (8+9)	~~////~~ ~~////~~ 111	2384, 2428, 2429, 2447 2329, 2331, 2356, 2382
	K6A6001 middle F30 - K6A6001 middle G30	1111 4	2013, 2425, 2500, 2661
	K6A6001 F30 - K6A6001 middle H30	11 4	2013, 2425
	K6A6001 F30 - K6A6001 lower J29	1 5	2013
	F30 - lower J30	1 5	2013
	M F30 - lower K30	1 5	2013
	F30 - Y00	1111	2013, 2115, 2425, 2500 2552
	K6A6001 G30 - K6A6001 middle H30	~~////~~ 1 4	2013, 2115, 2425, 2445
	G30 - lower J29	1 5	2013
	M G30 - lower J30	11 5	2013, 2125
	G30 - lower K30	1 5	2013
2552	G30 - Y00	~~////~~ 1111	2353, 2425, 2446, 2500 2013, 2125, 2134, 2330
	K6A6001 H30 - K6A6001 lower J29	1 5	2013
	M H30 - lower J30	11 5	2013, 2322
	H30 - lower K30	11 5	2013, 2283
	[2573] middle H30 - Y00	~~////~~ 111	2397, 2425, 2552, 2564 2013, 2125, ~~2174~~, 2283
	K6A6001 lower J29 - K6A6001 lower J30	1 6	2013
	J29 - lower K30	1111 6	2013, 2283, 2400, 243
	J29 - Y00	1111	2013, 2283, 2286, 2393
	K6A6001 lower J30 - K6A6001 lower K30	1 6	2013
	lower J30 - Y00	11	2013, ~~2055~~, 2129
	K6A6001 K30 - K6A6001 Y00	111	2013, 2283, 2285
2411 2457	K6B7000001 - K6B7000002	~~////~~ ~~////~~ 1	2256, 2271, 2295, 2309, 2327 ~~2016~~, ~~2156~~, 2222, 2224
	K6A6001 [B1Y] - K6A6001 H28	1	~~2020~~, 2393

✓ #

#

nd for this	B1Y – Y00	11		2486 2495 2530
upper	C26 middle D26	1	2	2530
	Y00 8	1		2616

	upper A23 S	upper B26	I	1	2401
	middle I28 S	middle I30	II	4	2421, 2600
C X W	I28	12	I		2421
C X W	I30	12	I		2421
C X W	Y00	12	I		2421
	upper E30 S	middle F30	III	2	2425, 2500, 2660
	E30	Y00	I		2425
	middle F30 S	middle I30	I	4	2425
	lower K29 S	lower K30	I	6	2431
	upper B41 S	middle I30	I	2	2431
	upper C27 S	lower K29	I	3	2443
	middle D25 S	lower K29	I	5	2443
	middle E27 S	lower K29	I	5	2443
	A36	Y00	I		2444
	upper A38 S	upper A41	I	1	2448
	upper A38 S	LOW A48	I		2448
	upper A41 S	LOW A48	I		2448
	A61	Y00	I		2449
	middle I30 S	lower L29	I	5	2450
	B1Y	C27	I		2467
	upper B27 S	middle I28	I	2	2483
C X W	A36	003	I		2488
C X W	A36	004	I		2488
	upper A32 S	upper B25	I	1	2490
	middle H28 S	lower L28	I	5	2499
	middle I28 S	lower L28	I	5	2499
	upper A30 S	upper B30	I	1	2500
	upper A30 S	upper D30	I	1	2500
	upper A30 S	middle F30	I	2	2500

		# occurrences		Vessel #s	
upper K6A6001A42	upper K6A6001B41	1	1	2322	
upper A42	mid H30	1	2	2322	
upper A42	mid I28	1	2	2322	
upper A42	lower J30	1	3	2322	
upper B41	mid H30	1	2	2322	
up B41	mid I28	1	2	2322	
up B41	lower J30	1	3	2322	
up B42	middle H30	1	2	2322	
up B42	mid I28	1	2	2322	
up B42	lower J30	1	3	2322	
mid H30	mid I28	1	4	2322	
upper B61	upper E28	11	1	2324, 2352	
B61	Y00	11		2324, 2532	
006 -	10	1		2331	
11 -	12	11		2342, 2344	(15 more on pg. 2)
B1Y -	J28	11		2346, 2393	
B1Y -	K28	11		2346, 2119	
up B21 -	upper B61	1	1	2347	
B21 -	Y00	1		2347	
mid B44 -	upper E28	1	2	2352	
up D28 -	upper E28	11	1	2352, 2118	
up D28 -	upper E29	11	1	2376, 2508,	
mid E27	upper E29	1	2	2376	
up B27	middle D25	11	2	2377 2587	
up B27	middle D26	1	2	2377	
B27	Y00	11		2377, 2483	
mid B44	middle D26	1	4	2377	
mid D25	middle D26	1	4	2377	
~~K29~~	~~K30~~	~~1~~		~~2431~~	

K6B700000	2 -	K6B7000009	1			2384
	3 -	9	1			2384
	3 -	10	1			2384
	C50 -	3	1			2385
	B1Y -	D25	11			2393, 2467
	B1Y -	E27	11			2393, 2467
	B1Y -	G29	1			2393
	B1Y -	I28	1			2393
middle S	D25 -	middle S G29	1		4	2393
middle S	D25 -	middle S I28	1		4	2393
middle S	B44 -	middle S G29	1		4	2393
middle S	B44	middle S I28	1		4	2393
middle S	E27	mid S G29	1		4	2393
mid S	E27	mid S H28	1		4	2393
mid S	E27	mid S I28	1		4	2393
mid S	G28	mid S G29	1		4	2393
mid S	G29	mid S H28	1		4	2393
mid S	G29	low S J28	1		5	2393
mid S	H28	mid S I28	~~IIII~~ 1		4	2602 2393, 2482, 2499, 2536
up S	D29	up S E28	1		1	2396
up S	D29	low S K30	1		3	2396
up S	E28	low S K30	1		3	2396
mid S	G28	low S L28	1		5	2398
up S	A24	up S A26	1		1	2399
up S	A24	up S B25	1		1	2399
up S	A24	mid S G30	1		2	2399
up S	A26	up S B25	1		1	2399
up S	A26	mid S G30	1		2	2399
up S	B25	mid S G30	1		2	2399

#J

	middle H29	lower K29	III		5	2561, 2603, [2563]
	middle I30	lower J30	II		5	2595, 2600
	middle G28	lower K28	I		5	2602
CXW	G28	3	I			2602
	middle H28	lower K28	I		5	2602
CXW	H28	3	I	✓		2602
	middle I28	lower K28	I		5	2602
CXW	I28	3	I			2602
CXW	J28	3	I			2602
CXW	K28	3	I			2602
	upper E29	middle I29	II		2	2603
	upper E29	lower K29	I		3	2603
	middle H29	middle I29	I		4	2603
	middle H29	lower J29	IIII		5	2603, 2604, [2530] [2575]
	(4)	9	I	✓		2613
2nd one (see pg.2)	(7)	8	~~IIII~~			2627, 2685, [2269] [2420]
	upper E30	middle G29	I		2	2660
	upper F30	middle G29	I		2	2660
	upper A24	upper A25	I		1	2663
	L29	Y00	I			2673
	middle G28	middle H28	I		4	2681
	middle E27	lower M28	I		5	[2118]
	lower A49	upper D28	I		3	[2118]
	lower A49	upper E28	I		3	[2118]
	middle D25	middle D26	I		4	[2119]
	~~C28~~	~~Y00~~	~~I~~			~~[2157]~~ Marmelade
	~~A41~~	~~B41~~	~~I~~			~~[2176]~~ "
*	upper D28	F37	I		7	[2208] residual shed
*	undersum F36	lower M28	I		9	[2220] unglazed 141 reducing residual shed

(1)

		# occurrences	Vessel #
~~K6B7000005~~	~~K6B7000006~~	~~1~~	~~2179~~
K6B7000005	K6B7000007	~~IIII~~ III	2416, 2438, 2685 2179, 2201, 2294, 2381, 2408
5	8	~~IIII~~	2179, 2222, 2381, 2438, 2685
6	8	~~IIII~~ IIII	2438, 2542, 2546, 2609 2179, 2222, 2310, 2331, 2356
K6A6001 $\boxed{\text{B1Y}}$	K6A6001 middle B44	1	~~2181, 2393, 2394~~ 2393 FC
K6A6001 C46	K6A6001 beneath E35	1	2191
middle C46	beneath E47	1	2191
beneath E35	beneath E47	1	2191
upper A23	Lower A47	1	2191
A49	Y00	1	2198
upper B62	Lower J28	1	2199
upper B27	mid B44	IIII	2205, 2317, 2377 $\boxed{2587}$
upper B27	MIDDLE E27	II	2205, 2317
K6B700000 2	10	II	2213, 2384
2	11	1	2213
~~7~~	~~11~~	~~1~~	~~2213~~
K6A6001 upper A39	K6A6001 Lower A49	1	2221
upper A39	Lower B48	1	2221
A39	upper C38	1	2221
A39	Lower D38	1	2221
A39	? F48	1	2221
Lower A49	Lower B48	1	2221
" A49	upper C38	1	2221
" A49	Lower D38	1	2221
" A49	? F48	1	2221
" B48	upper C38	1	2221
" B48	Lower D38	1	2221
" B48	? F48	1	2221

S Sumner Welles
T Transition
O Beneath Welles

X-mends

		# occurrances	Vessel #s
K6A6001I29 –	K6A6001Y00	1	2286 [2563]
lower S J29 –	lower S K29	IIII	2286, 2422, 2431, 2603
K29 –	Y00	1	2286
3	7↓	III	2294, 2357, 2384
B1Y	D29	1	2297
B1Y	G28	II	2297, 2393
upper S D29	middle S G28	1	2297
D29	Y00	II	2297, 2352
CXW D25 –	3	1	2299
CXW E27	3	1	2299
upper S E28 –	middle S G28	II	2300, 2352
middle S I28 –	lower S J28	IIII	2302, 2393, 2602, [2197]
00 5	9↓	1	2311
5	10↓	1	2311
9	10	1	~~2311~~ pg. 1
upper S A24 –	lower S M28	1	2315
middle S D25	lower S M28	1	2315
upper S B27 –	upper S B61	1	2317
~~B27~~	~~E27~~	~~1~~	~~2317~~
middle S B44	upper S B61	II	2317, 2352
upper S B61	middle S E27	1	2317
middle S I28 –	lower S J30	III	2322, 2600
upper S A32	S A42 upper	1	2322
S A32	S B41 upper	1	2322
S A32	S B42 upper	1	2322
S A32	S H30 middle	1	2322
S A32	S I28 middle	1	2322
S A32	S J30 lower	1	2322

		Mar	Cer.	
90	1			
57	2	12	193	48.7%
298	3	5	97	24.5
14	4	3	52	13.1
4.8	5	1	26	6.7
	6		16	4
	7		6	1.5
	8		3	1
	9		2	1
	10		1	.2
		21	396	

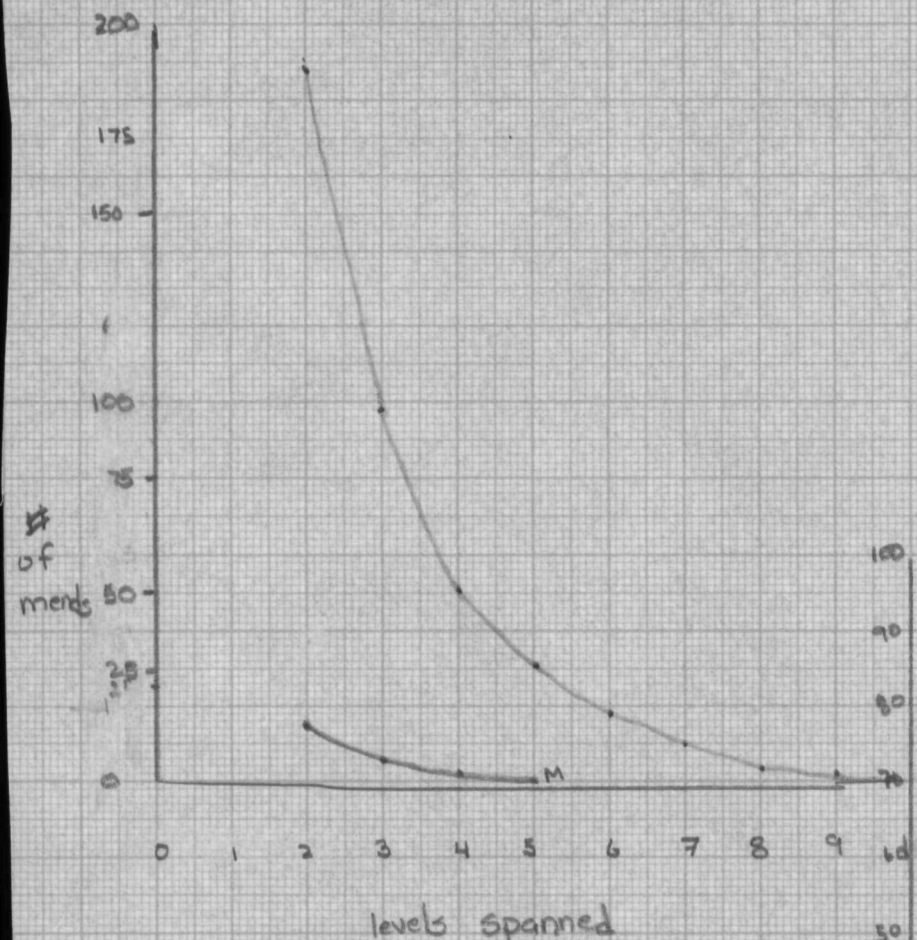

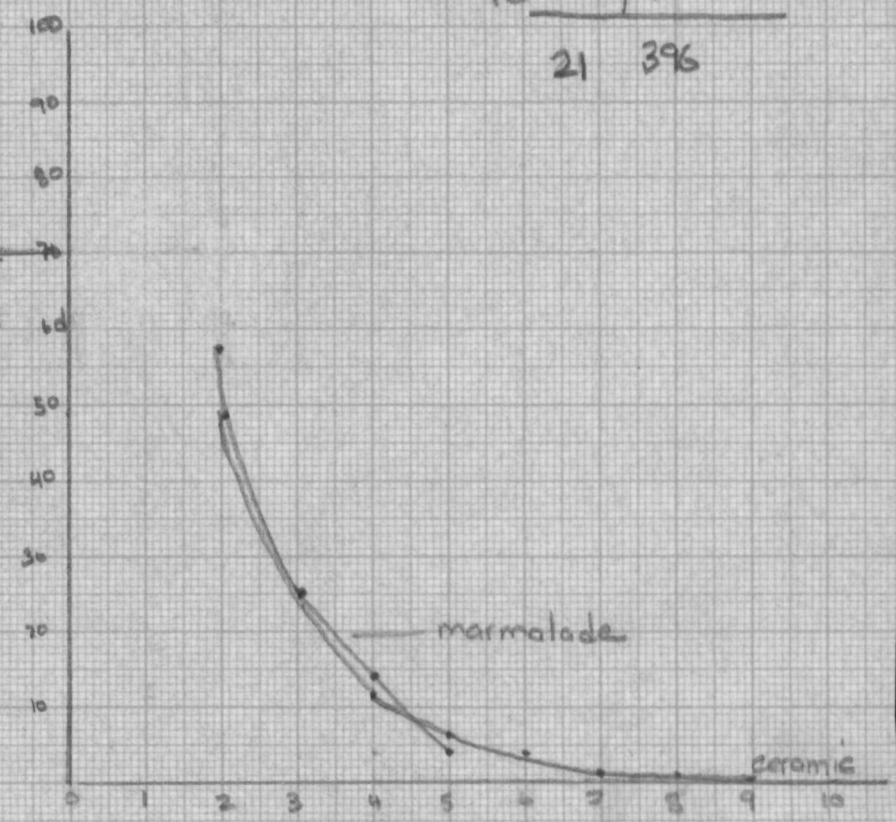

KC total # artifacts

well — 2436

cellar — 5003

Kit total # artifacts

well — 3317

cellar — 6117

Tobacco total #

well — 13

cellar — 104

YOO
combined prov.

not compare

MDR 10/11/85
Area 6 Cellar + Well

On the sherd count sheets
Ceramics

Old Record				New Record			
Vessel #							
~~2506~~	~~Ø~~	~~64822~~ No such #	~~1~~	chg. on Tom's error printout ~~2506~~	~~Ø~~	~~64222~~ K6B7000005	~~1~~
2520	Ø	62927 K6A6009-1A	1	2520	Ø	62727 K6A6001 E29	1
~~2530~~	~~7~~	~~62715~~ F4041260 3M	~~1~~	chg. on Tom's error printout ~~2530~~	~~7~~	~~62715~~ K6A6001 D28	~~1~~
~~2530~~	~~Ø~~	~~62530~~					
~~2530~~	~~Ø~~	~~62818~~ H28	~~7~~	chg. on Tom's ~~2530~~	~~Ø~~	~~62818~~ K6A6001 H28	~~8~~
~~2530~~	~~Ø~~	~~62812~~ F5050192 12	~~1~~			OMIT	
~~2530~~	~~Ø~~	~~62914~~ M28	~~2~~	chg. on Tom's ~~2530~~	~~Ø~~	~~62914~~ M28	~~3~~
~~2530~~	~~Ø~~	~~62914~~ F505016213	~~1~~ ⊗			~~OMIT~~	
Tom, ⊗ this line is prob. on a different page. And this one							
2530	Ø	64219 F6A6014A09	1	2530	Ø	64291 K6B7000007	1

Add provenience

Get the marmelade

X-mends

Add to all the charts + tables

Added to X-mend chart ✓ 11/25

Grid ~~Provenance~~	Unit	Provenience	Summer Wells	Middle	Underneath Wells
S207 E286	23	KGA6001	A (glass)		
S207 E287	24	KGA6001	A (trash)		
S207 E288	25	KGA6001	A B C D (glass) (Trash)	no gray layer	
S207 E289	26	KGA6001	A def. B def. C def. D def. (Trash)	* Need to find	
S207 E290	27	KGA6001	A B C D E	*	
S207 E291	28	KGA6001	G H I J K L A B C D E F	M (transition)	
S207 E292	29	KGA6001	A B C D E F G H I J K		
S207 E293	30	KGA6001	A B C D E F G H I J K ?	K (transition) ?	
Silas' Test Pit			[redacted]		
S207 E294	31				
~~Silas Test Pit~~ S207 E295	32	KGA6001	A B (glass)		
S208 E295	21	KGA6001	A, B (glass)		
S208 E295	22	KGA6001	A (glass)		
S207 E287	34	KGA6001	A glass (organics)		
S207 E288	35	KGA6001	A B (glass	(glass) B C	D E
S207 E289	36	KGA6001	A B	B (greasy clay) C	D E F G H
S207 E290	37	KGA6001	A	B C	D E F G
S207 E291	38	KGA6001	A, B, C *	? D (greasy clay) E	E F G H
S207 E292	39	KGA6001	A B	C D E	F G H
S207 E293	40	KGA6001	A B	C	D
S207 E294	41	KGA6001	A B	B	C
S207 E295	42	KGA6001	A B C (glass)		

Grid	Unit	Provenience	Sumner Welles	Middle	Underneath Welles
S205 E287	44	KGA6001	B		
S205 E288	45	KGA6001	~~A?~~	C B	~~B (collapsed solution)~~
S205 E289	46	KGA6001	~~A~~ B	C	D
S205 E290	47	KGA6001	~~A~~	B	C D E
S205 E291	48	KGA6001	~~A~~ B greasy gray (v. high artifacts)	F	G
S205 E292	49	KGA6001	~~A~~	B C greasy gray	D E
S205 E293	50	KGA6001	~~A?~~	B gray	C D
S205 E294	51	KGA6001	~~A~~ (glass)	B	
S205 E295	52	KGA6001	~~A~~, B (glass)		
S204 E288	55	KGA6001	B ~~mixed~~		
S204 E289	56	KGA6001	B mixed	C	
S204 E290	57	KGA6001	~~A~~	B	C D E F
S204 E291	58	KGA6001	~~A~~ B C	D E greasy gray	F G
S204 E292	59	KGA6001	~~A~~	BC	D
S204 E293	60	KGA6001	B	C	D E
S204 E294	61	KGA6001	~~A~~ B (glass)		
S204 E295	62	KGA6001	~~A~~, B (glass)		
S203 E288	65	KGA6001	B		
S203 E289	66	KGA6001	B		
S203 E290	67	KGA6001	B		
S203 E291	68	KGA6001	~~A~~	F G	Z
S203 E292	69	KGA6001	~~A~~	B	
S203 E293	70	KGA6001	no	information	
S203 E294	71	KGA6001	~~A~~		